REVISIONS			
REV.	DESCRIPTION	DATE	APPROVED

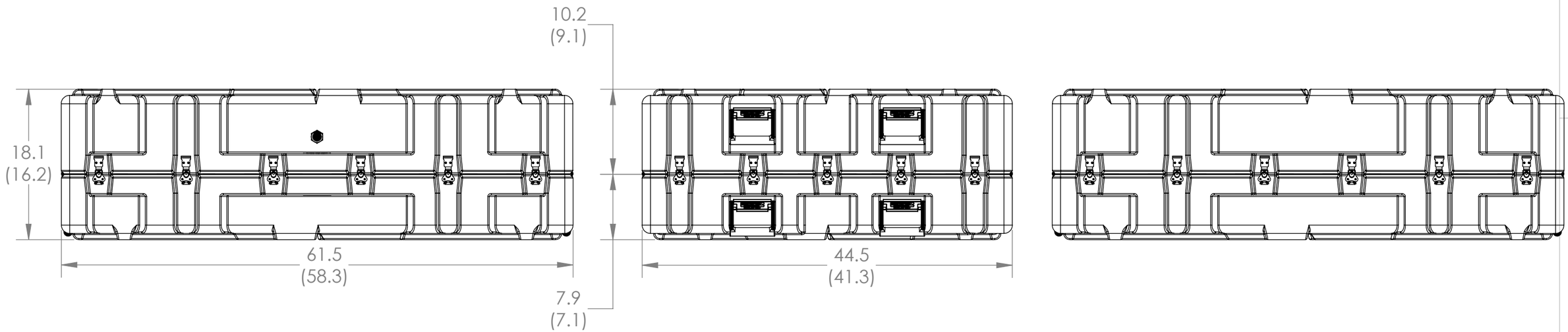

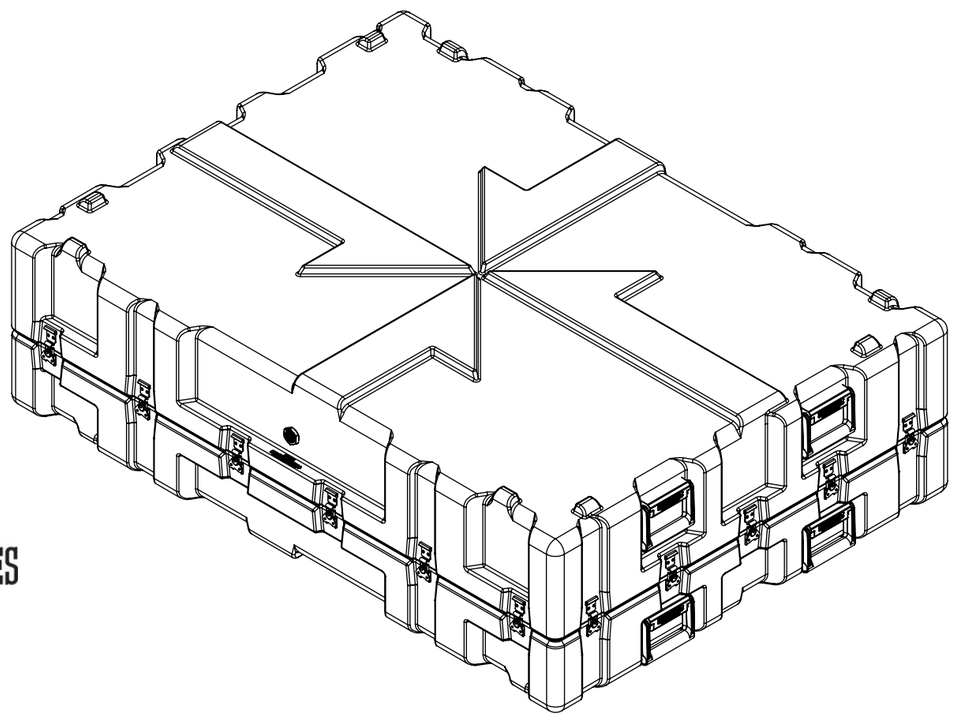

NOTE:
DIMENSIONS X.X ARE EXTERIOR DIMENSIONS
DIMENSIONS (X.X) ARE INTERIOR DIMENSIONS

SPECIALTY CASES
[DESIGN ▪ SUPPORT ▪ PROTECT]
P.O. Box 936
Sykesville, MD 21784
Phone: (800) 267-1674
https://www.specialtycases.com

SOURCE SUPPLIER
Gemstar Manufacturing
103 Mensing Way
Cannon Falls, MN 55009

CAGE CODE
36NE1

PROPRIETARY AND CONFIDENTIAL
COMPUTER CONTROLLED DOCUMENT
MANUAL ALTERATIONS PROHIBITED.
INFORMATION CONTAINED IN THIS DRAWING ARE THE SOLE PROPERTY OF GEMSTAR MANUFACTURING. ANY REPRODUCTION IN PART OR AS A WHOLE WITHOUT THE WRITTEN PERMISSION OF GEMSTAR MANUFACTURING IS PROHIBITED.

UNLESS OTHERWISE SPECIFIED:
DIMENSIONS ARE IN INCHES
TOLERANCES
MOLDED FEATURES +/-.030 + .005 IN/IN
5 AXIS MACHINED FEATURES
FEATURE SIZE +/-.005
FEATURE TO FEATURE +/-0.010
FIXTURE TO FEATURE +/-0.031
HAND ROUTED FEATURE +/-.031

INTERPRET GEOMETRIC TOLERANCING PER:

MATERIAL

FINISH

DO NOT SCALE DRAWING

	NAME	DATE
DRAWN		
CHECKED		
ENG APPR.		
MFG APPR.		
Q.A.		

COMMENTS:

GEMSTAR MANUFACTURING

TITLE:

SH5841-0709

SIZE	DWG. NO.	REV
B		–

SCALE: 1:12 | SHEET 1 OF 1